MODULE 2

Introduction:

A pump which is the heart of a hydraulic system converts mechanical energy into hydraulic energy. The mechanical energy is delivered to the pump via prime mover such as electric motor. Due to the mechanical action the pump creates a partial vacuum at its inlet. This permits atmospheric pressure to force the fluid through the inlet line and into the pump. The pump then pushes the fluid into the hydraulic system.

Pump Classifications:

1. **Non Positive Displacement Pumps:** The most common types of dynamic pumps are the centrifugal and axial pumps. Although these pumps provide smooth continuous flow, their flow output is reduced as circuit resistance is increased and thus are rarely used in fluid power systems. In dynamic pumps there is a great deal of clearance between the rotating impeller and the stationary housing. Thus as the resistance of the external system starts to increase, some of the fluid slips back into the clearance spaces, causing a reduction in the discharge flow rate. This slippage is due to the fact that the fluid follows the path of least resistance. When the resistance of the external system becomes infinitely large the pump will produce no flow. These pumps are typically used for low pressure, high volume flow applications. Also since there is a great deal of clearance between the rotating and stationary elements, dynamic pumps are not self priming unlike positive displacement pump.
2. **Positive Displacement Pump**: This type of pump ejects a fixed quantity of fluid per revolution of the pump shaft. As a result, pump output flow, neglecting changes in the small internal leakage is constant and not dependent on system pressure. This makes them particularly well suited for fluid power systems. However positive displacement pumps must be protected against overpressure if the resistance to flow becomes very large. This can happen if a valve is completely closed and there is no physical place for the fluid to go. The reason for this is that a positive displacement pump continues to eject fluid causing an extremely rapid buildup in pressure as the fluid compressed. A pressure relief valve is used to protect the pump against overpressure by diverting pump flow back to the hydraulic tank where the fluid is stored for system use.

Classification of Positive Displacement Pump:

1. Gear Pumps
    a. External Gear Pump
    b. Internal Gear Pump
    c. Lobe Pump
    d. Screw Pump

2. Vane Pumps
    a. Unbalanced Vane Pumps
    b. Balanced Vane Pumps
    c. Pressure Compensated Vane Pump
3. Piston pumps
    a. Axial Piston Pump
    b. Radial Piston Pump

GEAR PUMPS:

External Gear Pump:

The given figure shows the operation of an external gear pump, which develops flow by carrying fluid between the teeth of two meshing gears. One of the gears is connected to a drive shaft connected to the prime mover. The second gear is driven as it meshes with the driver gear. Oil chambers are formed between the gear teeth, the pump housing and the side wear plates. The suction side is where teeth come out of mesh and it is here that the volume expands bringing about a reduction in pressure to below atmospheric pressure. Fluid is pushed into this void by atmospheric pressure because the oil supply tank is vented to the atmosphere. The discharge side is where teeth go into mesh and it is here that the volume decreases between mating teeth. Since the pump has a positive internal seal against leakage the oil is positively ejected into the outlet port. The displacement of the gear pump is determined by volume of fluid between each pair of teeth, Number of teeth and speed of rotation.

$$Q_T = V_D \times N$$

$$V_D = \frac{\Pi}{4}(D_o^2 - D_i^2)\,L$$

Q_T – Theoretical Pump Flow Rate L – Width Of Gear

VD – Displacement Volume of Pump N – Speed of Pump

Do, Di – Outside and Inside Diameter of Gear Teeth

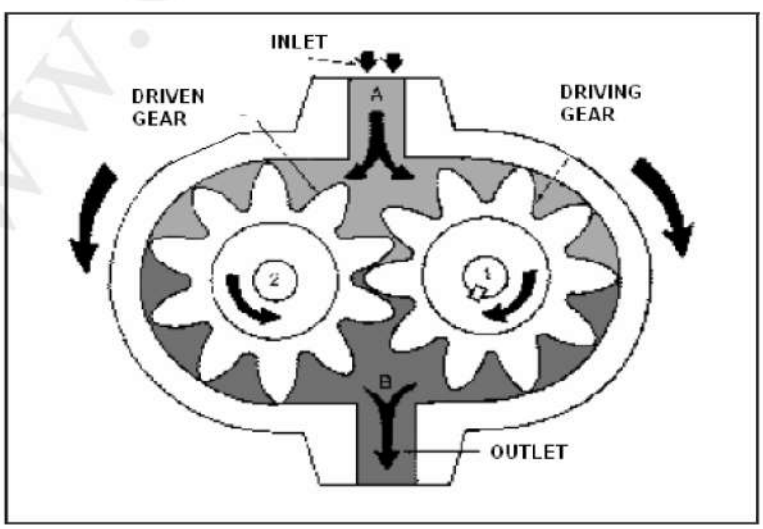

There must be a small clearance between the teeth tip and pump housing. As a result some of the oil at the discharge port can leak directly back toward the suction port. This means that the actual flow rate Q_A is less than the theoretical flow rate Q_T which is based on volumetric displacement and pump speed. This internal leakage called pump slippage is identified by the term volumetric efficiency.

$$\eta_v = \frac{Q_A}{Q_T}$$

Advantages

- High speed
- High pressure
- No overhung bearing loads
- Relatively quiet operation
- Design accommodates wide variety of materials

Disadvantages

- Four bushings in liquid area
- No solids allowed
- Fixed End Clearances

Applications

- Various fuel oils and lube oils
- Chemical additive and polymer metering
- Chemical mixing and blending (double pump)
- Industrial and mobile hydraulic applications splitters, lifts
- Acids and caustic (stainless steel or composite construction)

Low volume transfer or application

Internal Gear Pump:

The figure shows the operation of the internal gear pump. This design consists of an internal gear, a regular spur gear, a crescent shaped seal and an external housing. As power is applied to either gear the motion of the gears draws fluid from the reservoir and forces it around both sides of the crescent seal which acts as a seal between the suction and discharge ports. When the teeth mesh on the side opposite to the crescent seal the fluid is forced to enter the discharge port of the pump.

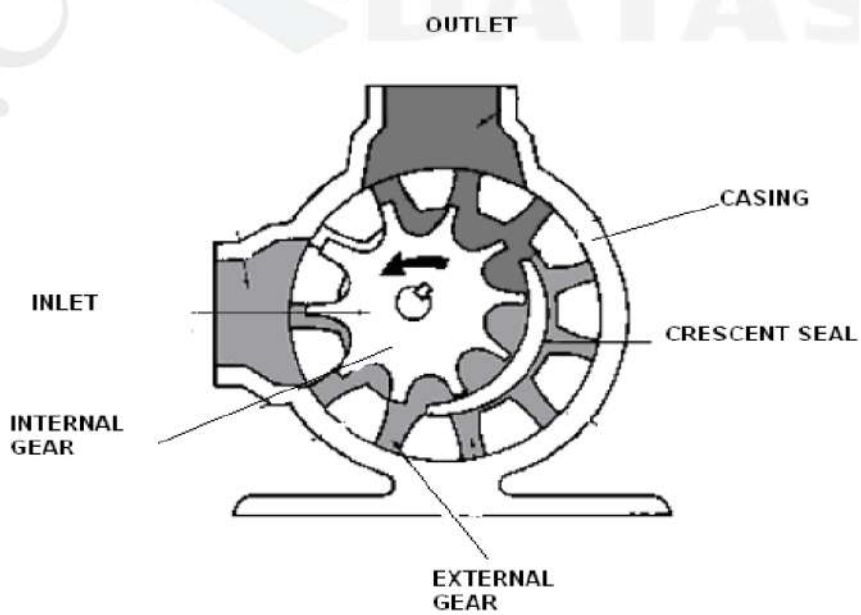

Advantages

- Only two moving parts
- Non-pulsating discharge
- Excellent for high-viscosity liquids
- Constant and even discharge regardless of pressure conditions
- Operates well in either direction
- Single adjustable end clearance

Disadvantages

- Usually requires moderate speeds
- Medium pressure limitations
- One bearing runs in the product pumped
- Overhung load on shaft bearing

Applications

- All varieties of fuel oil and lube oil
- Resins and Polymers
- Alcohols and solvents
- Food products such as corn syrup, chocolate, and peanut butter
- Paint, inks, and pigments

Lobe Pump:

In this pump, the gears are replaced by the lobes. This pump operates in a similar fashion as that of external pump. But unlike the external gear pump, these both lobes are driven independently and they do not have actual contact with each other.

Lobe contact is prevented by external timing gears located in the gearbox. Pump shaft support bearings are located in the gearbox, and since the bearings are out of the pumped liquid, pressure is limited by bearing location and shaft deflection. As the lobes come out of mesh, they create expanding volume on the inlet side of the pump. Liquid flows into the cavity and is trapped by the lobes as they rotate. Liquid travels around the interior of the casing in the pockets between the lobes and the casing it does not pass between the lobes. Finally, the meshing of the lobes forces liquid through the outlet port under pressure. So, they are quieter than other types of gear pumps. Since the lobe pump has smaller number of mating elements, the lobe pump output will have a somewhat greater amount of pulsating, although its volumetric displacement is generally greater than that for other types of gear pumps.Lobe pumps are frequently used in food applications because they handle solids without damaging the product.

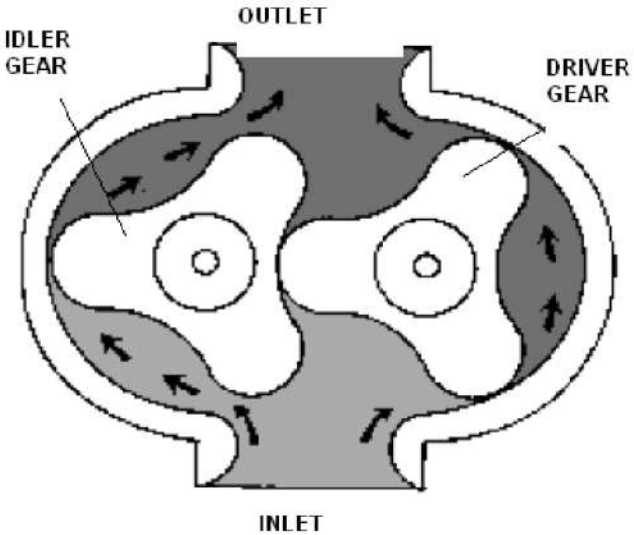

Advantages

- Pass medium solids
- No metal-to-metal contact
- Long term dry run (with lubrication to seals)

Disadvantages

- Requires timing gears
- Requires two seals
- Reduced lift with thin liquids

Applications

- Paper coatings
- Soaps and surfactants
- Paints, dyes, Rubber and adhesives
- Pharmaceuticals

Gerotor Pump: It is a positive displacement pumping unit. The name gerotor is derived from "Generated Rotor". A gerotor unit consists of an inner and outer rotor. The inner rotor has N teeth, and the outer rotor has N+1 teeth. The inner rotor is located off-center and both rotors rotate. During part of the assembly's rotation cycle, the area between the inner and outer rotor increases, creating a vacuum. This vacuum creates suction, and hence, this part of the cycle is where the intake is located. Then, the area between the rotors decreases, causing compression. During this compression period, fluids can be pumped, or compressed (if they are gaseous fluids).

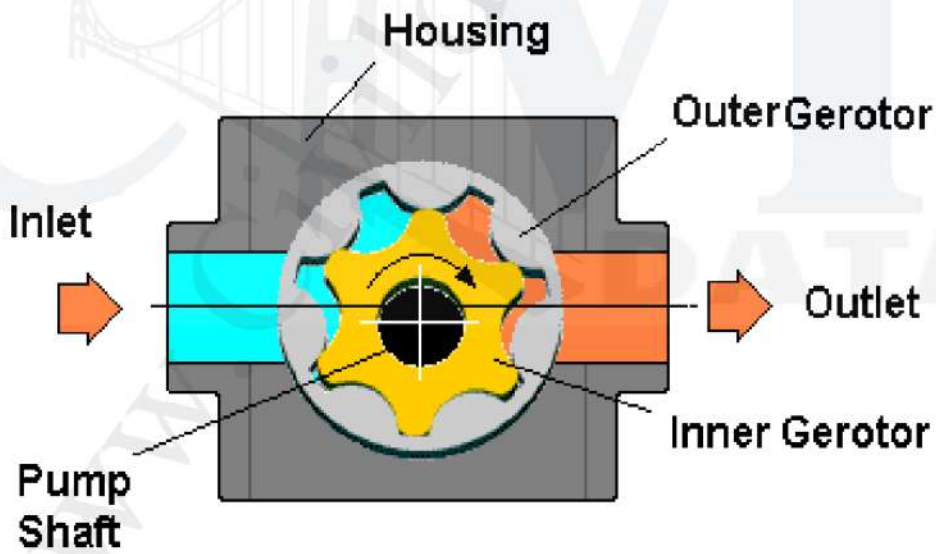

Gerotor Pump

Gerotor pumps are generally designed using a trochoidal inner rotor and an outer rotor formed by a circle with intersecting circular arcs. A gerotor can also function as a motor. High pressure gas enters the intake area and pushes against the inner and outer rotors, causing both to rotate as the area between the inner and outer rotor increases. During the compression period, the exhaust is pumped out.

Advantages

- High Speed
- Only two moving parts
- Constant and even discharge regardless of pressure conditions
- Operates well in either direction
- Quiet operation

Disadvantages

- Medium pressure limitations
- Fixed clearances
- No solids allowed
- One bearing runs in the product pumped
- Overhung load on shaft bearing

Applications

- Light fuel oils
- Lube oil
- Cooking oils
- Hydraulic fluid

Screw Pump:

It is an axial flow positive displacement unit. Three precision ground screws, meshing within a close fitting housing, deliver non pulsating flow quietly and efficiently. The two symmetrically opposed idler rotors act as rotating seals, confining the fluid in a succession of closures or stages. The idler rotor are in rolling contact with the central power rotor and are free to float in their respective housing bores on a hydrodynamic oil film. There are no radial bending loads. Axial hydraulic forces on the rotor set are balanced, eliminating any need for thrust bearings. The liquid is introduced at the two ends and discharged at the centre. The pumping action comes from the sealed chamber. The sealed chamber formed by the contact of the two gears at the intersection of their addenda and by the small clearance between the screws and the pump housing. This working is similar to a nut moving along a thread rod when the rod rotated. In these pumps, it should be noted that the liquid does not rotate but moves linearly. Thus the liquid moves forward along the axis with the rotation of the screw and is discharged to the outlet port.

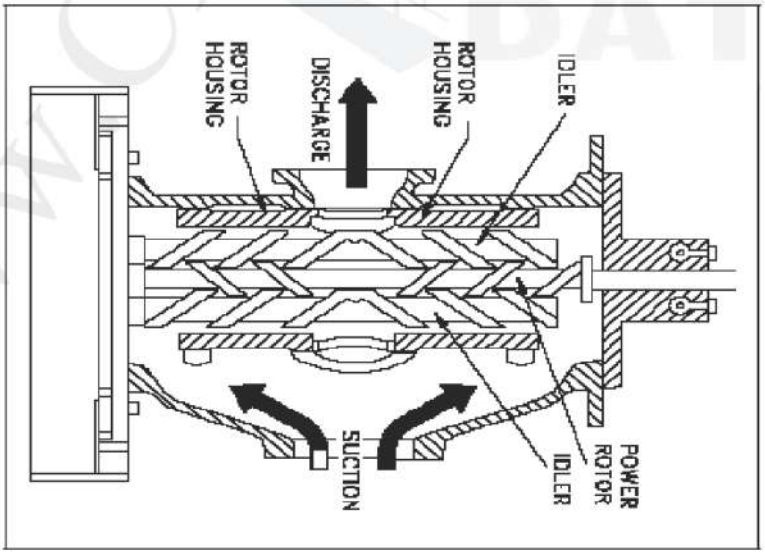

Screw Pump

Advantages:

1. Give uniform pressure with negligible pulsations.
2. Very quiet, because of rolling action of the screw spindles.
3. Can handle liquids containing vapour and gases

Disadvantages:

1. It is difficult to manufacture the screw profile to maintain close tolerance.
2. Overall volumetric and mechanical efficiency is relatively low.

Types of Vane Pumps:

1. Unbalanced Vane Pumps
    a. Fixed displacement unbalanced pumps
    b. Variable displacement unbalanced pumps
2. Balanced Vane Pumps

Unbalanced Vane Pump:

The pump consists of a rotor which contains radial slots splined to the drive shaft. The rotor rotates inside a cam ring. Each slot contains a vane which is free to slide in or out of the slots in the pump rotor. The vane is designed to mate with the surface of the cam ring as the rotor turns. The cam ring axis is offset to the drive shaft axis. As the rotor rotates, the centrifugal force pushes the vanes out against the surface of the cam ring. The vanes divide the space between the rotor and the cam ring into a series of small chambers. During the first half of rotor rotation, the volume of these chambers increase, thereby causing a reduction of pressure. This is the suction process which causes the fluid to flow through the inlet port and fill the void.

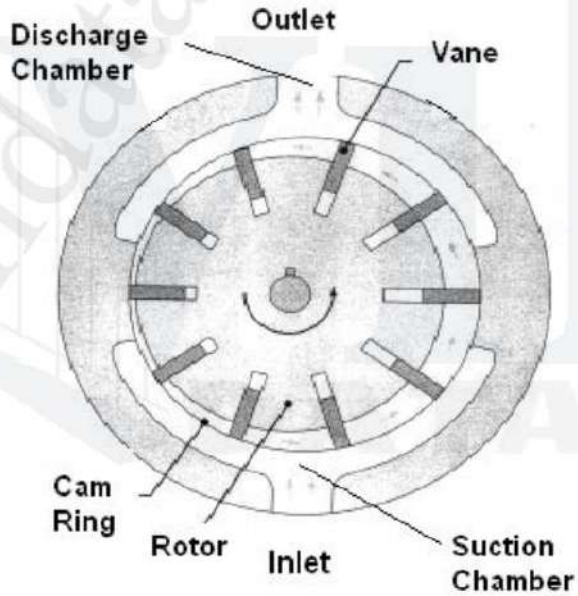

Unbalanced Vane Pump

As the rotor rotates through the second half, the cam ring pushes the vane back into their slots and the trapped volume is reduced. This positively ejects the trapped fluid through the outlet port. In this pump, all the pumping action takes place in the chambers located on the one side of the rotor and shaft. So the pump is of an unbalanced design.

Fixed Displacement Unbalanced Vane Pumps: In this type rotor housing eccentricity is constant. Hence the displacement volume is fixed. A constant volume of fluid is discharged during each revolution of the rotor.

Variable Displacement Unbalanced Vane Pump: Variable displacement can be provided if the housing can be moved with respect to the rotor. This movement changes the eccentricity and hence the displacement. Usually a hand wheel or pressure compensator can be used to move the cam ring to change the eccentricity.

Balanced vane pump:

In balanced vane pump, the rotor rotates inside a cam ring of elliptical shape. It has two inlet and outlet ports which are diametrically opposite each other. Movement of the vanes in and out causes the chamber between them to increase and decrease.

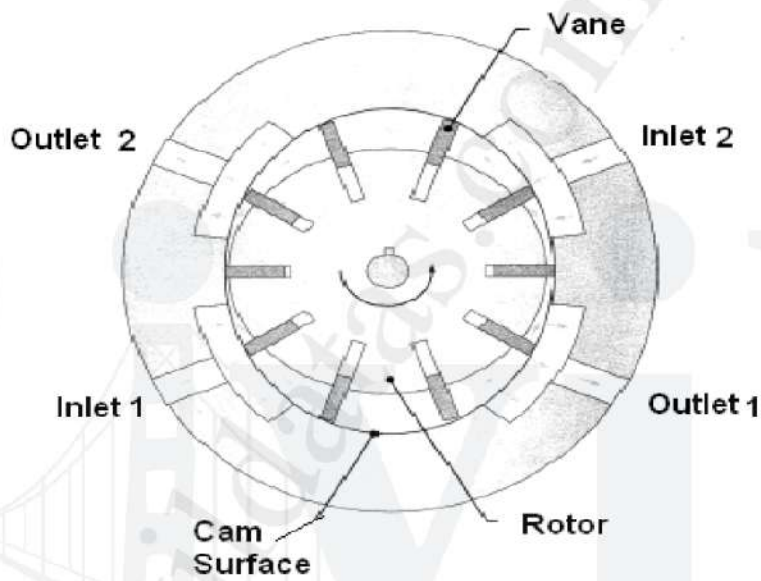

Balanced Vane Pump

When these chambers are increasing in size, the fluid is being sucked into the pump through the inlet ports. The two inlet ports are connected to a common inlet passage. When the chambers are decreasing in size, the fluid starts being delivered into the system through the outlet ports which are connected to a common outlet passage. Because the pressure ports are opposite to each other, a complete hydraulic balance can be achieved. One disadvantage of balanced vane pump is that it cannot be designed as a variable displacement pump.

Advantages:

1. Volumetric and overall efficiencies are high.
2. only small changes in capacity occur with variations in viscosity and discharge pressure
3. Their vanes are self compensating for wear and also vanes can be easily replaced.
4. They are self priming, robust and give constant delivery for a set rotor speed.

Disadvantages:

1. They cannot handle abrasive liquids
2. They require seals and foreign bodies can damage the pump
3. They cannot be operated against a closed discharge without damage to the pump. Hence relief valves are required

Pressure Compensated Variable Delivery Pump:

In this system pressure acts directly via a hydraulic piston on the right side. This forces the cam ring against a spring loaded piston on the left side. If the discharge pressure is large enough, it overcomes the compensator spring force and shifts the cam ring to the left. This reduces the eccentricity and decreases the flow. If the pressure continues to increase, there is no eccentricity and pump flows becomes zero.

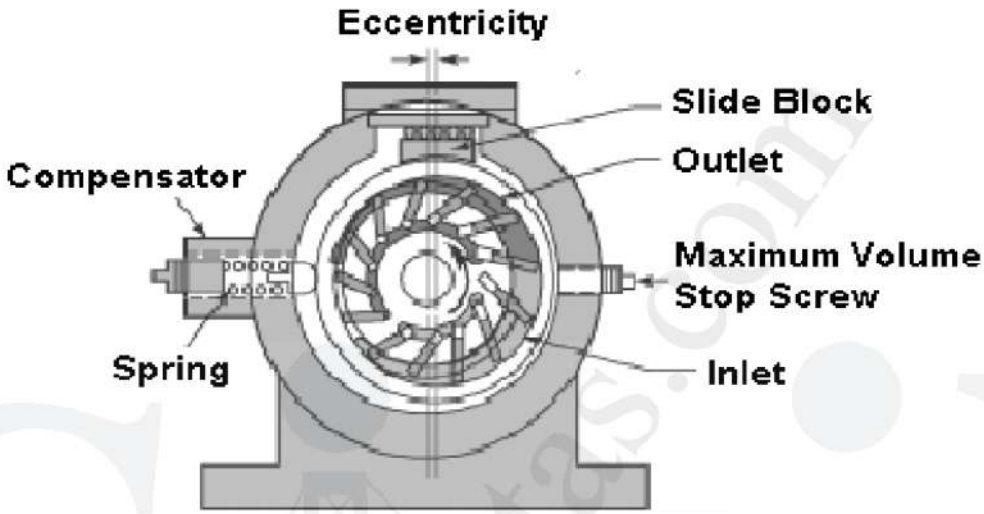

Pressure Compensated Vane Pump

Piston Pumps:

In piston pumps, the pumping action is affected by a piston that moves in a reciprocating cycle through a cylinder. The basic operations of piston pumps are very similar to that of the reciprocating engines. These pumps are classified as

1. Axial Piston Pumps
    a. Swash plate axial piston pump
    b. Bent axis Axial piston pump
2. Radial Piston Pumps

In axial piston pumps, a number of pistons and cylinders are located in a parallel position with respect to the drive shaft, while in the radial type they are arranged radially around the rotor hub.

Axial Piston Pump:

In this type rotary shaft motion is converted to axial reciprocating motion which drives the piston. Most axial piston pumps are multi piston designs and utilize check valves or port plates to direct liquid flow from inlet to discharge. Output can be controlled by manual, mechanical or pressure compensated controls.

Swash Plate (In line) axial Piston Pump:

In this pump rotary drive motion is converted to reciprocating, axial piston motion by means of the swash plate, mounted on the drive shaft. Thus the rotation of the swash plate produces in and out motion of the piston in their cylinders and hence the fluid is discharged.

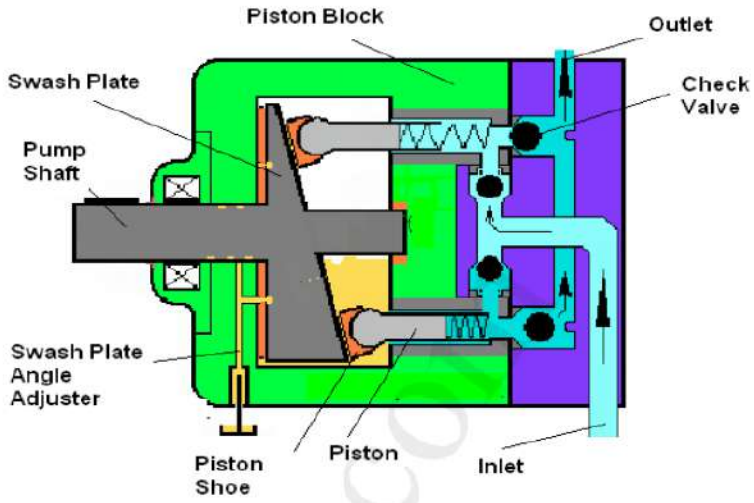

Swash Plate Piston Pump

This type of pumps can also be designed to have variable displacement capability. This can be achieved by altering the angle of the swash plate. Because in the swash plate axial pump, the angle of tilt of the swash plate determines the piston stroke and hence the pump displacement. The increase in the swash plate angle will increase the piston stroke and hence the fluid displacement. When the swash plate is vertical, then the displacement is zero. Even one can reverse the flow direction by changing the angle of swash plate. However, the maximum swash plate angle is generally limited to 17.5°, due to various design considerations.

Bent Axis Axial Piston Pump:

This type of pump contains a cylinder block rotating with the drive shaft. As shown the centerline of the cylinder block is sent at an offset angle relative to the centerline of the drive shaft. The cylinder has a number of pistons and cylinders arranged along a circle. The ball and socket joints connect the piston rods with the drive shaft flange. When the distance between the drive shaft flange and cylinder block changes, the piston move in and out of

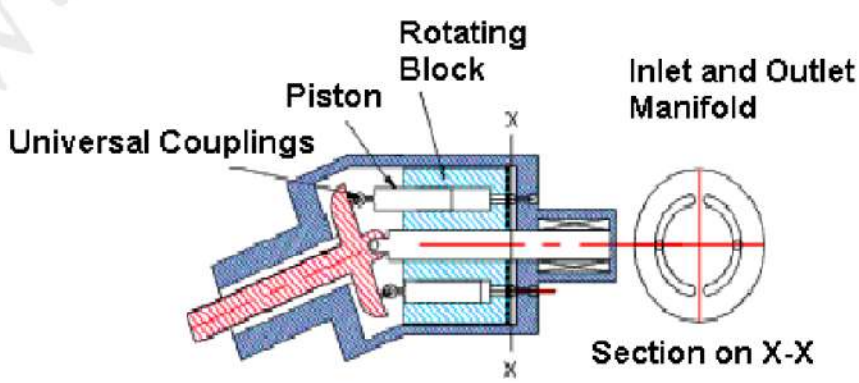

Bent Axis Type Piston Pump

the cylinder. In order to provide alignment and positive drive, a universal link is used to connect the block to the drive shaft. When the piston carrying body turns, the exit passage in the cylinder bores move along the control slots of a firmly positioned control plate and are thus connected alternatively to suction or discharge pipelines.

In the fixed displacement pumps, the pumps are mounted in a fixed casing so that swing angle cannot be adjusted. So the fixed displacement of the piston and hence the constant discharge of fluid are achieved. In variable displacement pumps, the swing angle can be varied. Because the volumetric displacement of the pump varies with the offset angle. When the offset angle is zero, then the displacement will be zero. However, the angle will vary from 0° to 30°.

Radial Piston Pump:

The radial piston pump has a number of radial pistons in a cylinder block which revolves around a stationary pintle or valve. The pistons remain in contact with the reaction ring due to centrifugal force and back pressure on the pistons. A drive shaft is attached to the end of cylinder block and provides the power needed to the pump. The reaction ring is moved eccentrically with respect to the pintle axis.

If the cylinder block is rotated in a clockwise direction, the pistons on one side travel outward and sucks the fluid when it passes the suction port of the pintle. When the piston passes the maximum point eccentricity, it is forced inward by the reaction ring. This force the fluid to enter into the discharge port. The displacement can be varied by moving the reaction ring to change the piston stroke.

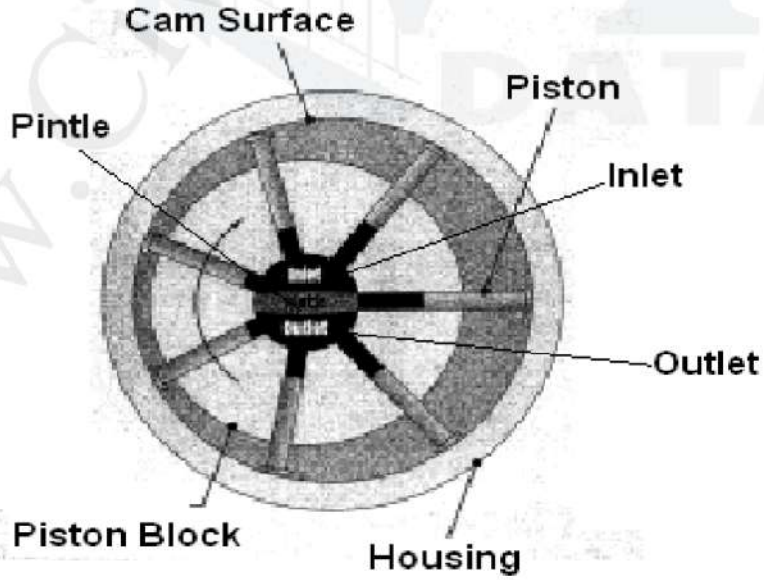

Radial Piston Pump

Important Formulas:

1. Theoretical Discharge for Gear Pump: $Q_T = \frac{\pi}{4}(D_o^2 - D_i^2)\, b\, N$	D_o – Outer Diameter of Gear D_i – Inner Diameter of Gear b - Width of Gear N – Speed of Pump
2. Theoretical Discharge for Vane Pump: $Q_T = \frac{\pi}{4}(D_c + D_R)\, 2\, e\, L\, N$	D_c – Diameter of Cam Ring D_R – Diameter of Rotor e – Eccentricity L – Width of Rotor
3. Bent Axial Piston Pump $Q_T = DANY \sin\theta$; $\sin\theta = \frac{S}{D}$	D- Piston circle Diameter A – Area of Piston Y – Number of pistons θ - Offset angle S – Piston stroke
4. Swash Plate Pump: $Q_T = DANY \tan\theta$	θ - Offset angle of Swash Plate
5. Radial Piston Pump $Q_T = 0.5\, e\, Y\, \pi\, D^2 N$	

Volumetric Efficiency: It indicates the amount of leakage within the pump. This involves considerations such as manufacturing tolerances and flexing of the pump casing under the design pressure operating conditions.

$$\eta_v = \frac{\text{Actual Flow rate produced by pump}}{\text{Theoretical flow rate the pump should produce}} \text{ X } 100$$

$$\eta_v = \frac{Q_A}{Q_T}$$

Mechanical Efficiency: It indicates the amount of energy losses that occur due to reasons other than leakages. This includes friction in bearings and between other mating parts. It also includes energy losses due to fluid turbulence.

$$\eta_m = \frac{\text{Theoretical Power required to operate the pump}}{\text{Actual power delivered to the pump}} \text{ x } 100$$

$$\eta_m = \frac{PQ_T}{2\pi NT}$$

Overall Efficiency:

$$\eta_o = \eta_v \times \eta_m$$

11.8 SELECTION OF PUMP

For making the correct selection of pump for any particular hydraulic system, the designer has to have thorough knowledge about all kinds of pumps. The main parameters affecting the selection of a particular type of pump are discussed here.

Maximum operating pressure This is determined by the required power of the system, the application, availability of components and type of fluid. The main advantage of higher working pressure is the reduction in flow rates for a given power. This results in smaller pumps, smaller pipes and smaller components. But the component cost is higher and lowers the choice of components. The disadvantages are that at higher working pressures, the compressibility of the fluid used can have adverse effects on the precision control.

The maximum pressures for various applications is given in Table 11.7

Table 11.7

Application	Pressure (bar)
Machine tool	200
Mechanical handling	250
Mobile	300
Press work	800

Maximum delivery The pump selected must be capable of delivering the maximum flow rate demanded by the circuit. If the circuit demand is reasonably constant, a fixed displacement pump is chosen. When the demand is at a series of fixed levels, a multi-pump system can be used. For demands which vary within a relatively narrow range, variable displacement pump can be used. If there is a wide variance in system demand, an accumulator circuit may best satisfy the requirements. It is usual to select a pump with a capacity about 10% higher than required to make an allowance for the reduction in volumetric efficiency with wear.

Pump drive speed The fluid delivery rate is proportional to the speed of rotation. Each design has a minimum and maximum operating speed; the faster the pump is run, the shorter will be its life.

Type of fluid Pumps are designed to operate within a particular range of fluid viscosity. Mineral oils of correct viscosity will work satisfactorily with most pumps, provided the oil is clean. Operating with synthetic or water based fluids (less lubricating property) reduces the working life of a pump which relies on the hydraulic fluid to lubricate the bearings and mountings.

Fluid contamination Any fluid contamination will cause pump damage. Precision pumps with very fine clearances are more susceptible to damage. Non-precision gear pumps, lobe pumps and gerotor pumps are the most dirt tolerant. In case of precision pumps, the manufacturer's recommendations on filtration must be followed.

Pump pulsation Pulsation although appearing as a fluctuation of pressure, actually arises as a function in flow rate because pressure is a dependent quantity. Freedom from pulsation – often primary requirement depends on geometric (shape), kinematic

(velocity and flow path) and dynamic (pressure and force) consideration. If pulsation problem is considered serious, a pump with very small slip is chosen, i.e., very high volumetric efficiency. Internal gear and vane pumps have somewhat less pulsation. But piston pumps inherently have pulsation problem.

Pump noise Noise has become an increasingly important environmental problem. Generally, the sound generated increases with speed and pressure. The noise levels vary considerably between pumps of the same type but of different makes. So, the manufacturers are working on their pumps to reduce the emission level.

Size and weight of pump The size and weight of the hydraulic system is very important in mobile applications.

In the mobile system, the weight of the hydraulic system is reduced by,

1. increasing the operating pressure
2. reducing the size of the reservoir

The best power to weight ratio can usually be achieved in the 200 – 300 bar operating pressure range.

Efficiency The efficiency depends on design, operating pressure, speed and fluid viscosity. Usually reciprocating pumps tend to have higher efficiencies than rotary pumps.

Cost When cost is considered, not only the initial cost but running and maintenance costs should also be taken into account. Gear and vane pumps are lower cost units. The piston types have a comparitively higher cost.