MODULE 2

SYLLABUS:

Friction clutch: - fundamentals, driven plate inertia, driven plate transmitted torque, driven plate wear –angular driven plate cushioning and torsional damping, clutch friction materials, when clutch is worn out.

Pull type diaphragm clutch, multiple diaphragm clutch, multi-plate hydraulically operated automatic transmission clutch, semi centrifugal clutch, fully automatic centrifugal clutch, and integral single plate diaphragm clutch.

Need of gear box, resistance to vehicle motion, power to weight ratio, speed operating range-five speed and reverse sliding mesh, constant mesh, and synchromesh gear boxes:-gear synchronization and engagement.

Over drives – hydrodynamic fluid couplings: - efficiency and torque capacity – fluid friction coupling- torque converters.

FRICTION CLUTCH:

- Clutches are designed to engage and disengage the transmission system from the engine and when the gearbox gear changes are necessary.
- The gradual increase in the transfer of engine torque to the transmission must be smooth.

Driven plate inertia:

- To enable the clutch to be operated effectively, the driven plate must be as light as possible so that when the clutch is disengaged, it will have the minimum of spin, i.e. very little flywheel effect.
- Smoothness of clutch engagement may be achieved by building into the driven plate some sort of cushioning device, whilst rapid slowing down of the driven plate is obtained by keeping the diameter, center of gravity and weight of the driven plate to the minimum for a given torque carrying capacity.

Driven plate transmitted torque capacity:

- The torque capacity of a friction clutch can be raised by increasing the coefficient of friction of the rubbing materials, the diameter and the spring thrust sandwiching the driven plate.
- The friction lining materials now available limit the coefficient of friction to the order of 0.35.
- There are materials which have higher coefficient of friction values, but these tend to be unstable and to snatch during take-up.
- Increasing the diameter of the driven plate unfortunately raises its inertia, its tendency to continue spinning when the driven plate is freed while the clutch is in the disengaged position.

Driven plate wear:

- Lining life is improved by **increasing the number of pairs of rubbing surfaces** because wear is directly related to the energy dissipation per unit area of contact surface.

- In practice, as the wear rate is also greatly influenced by the peak surface rubbing temperature and the intermediate plate of a twin plate clutch operates at a higher working temperature than either the flywheel or pressure plate which can be more effectively cooled.
- Thus, in a twin plate clutch, half the energy generated while slipping must be absorbed by the intermediate plate and only a quarter each by the flywheel and pressure plate.
- For heavy duty applications such as those required for large trucks, twin driven plates are used, while for high performance cars where very rapid gear changes are necessary and large amounts of power are to be developed, small diameter multi-plate clutches are preferred.

<u>Angular driven plate cushioning and torsional damping:</u>

1. <u>Axial driven plate friction lining cushioning:</u>

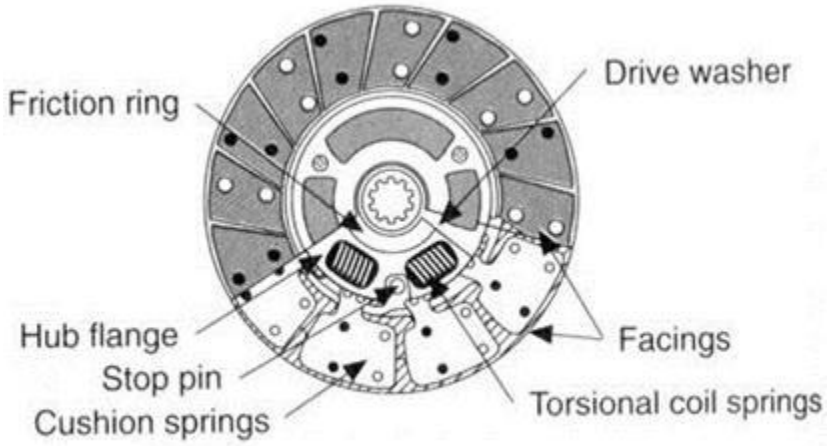

Parts of a clutch disc.

- Axial cushioning between the friction lining faces may be achieved by forming a series of evenly spaced 'T' slots around the outer rim of the disc. This then divides the rim into a number of segments.
- The advantages of axial cushioning of the face linings provide the following:
    - Better clutch engagement control, allowing lower engine speeds to be used at take-up thus prolonging the life of the friction faces.
    - Improved distribution of the friction work over the lining faces reduces peak operating temperatures and prevents lining fade.

2. <u>Torsional damping of driven plate:</u>
    - To transmit torque more smoothly and progressively during take-up of normal driving and to reduce torsional oscillations being transmitted from the crankshaft to the transmission, compressed springs are generally arranged circumferentially around the hub of the driven plate.
    - Engine torque is therefore transmitted from the friction face linings and side plates through the springs to the hub flange, so that any fluctuation of torque will cause the springs to compress and rebound accordingly.

Clutch friction materials:

- Clutch friction linings or buttons are subjected to severe rubbing and generation of heat for relatively short periods.
- Therefore, it is desirable that they have a combination of these properties:
  - Relatively high coefficient of friction under operating conditions.
  - Capability of maintaining friction properties over its working life.
  - Capability of withstanding high-pressure plate compressive loads.
  - Adequate shear strength to transmit engine torque.
  - High level of cyclic working endurance without the deterioration in friction properties.

Materials:

1. Asbestos-based linings:
   - The normal highest working temperature below which these asbestos linings will operate satisfactorily giving uniform coefficient of friction between **0.32 and 0.38** and a reasonable life span is about **260 °C**.
   - Most manufacturers of asbestos-based linings quote a maximum temperature 360 °C beyond which the lining, if operated continuously, will suffer damage and deterioration in wear resistance.
2. Asbestos substitute friction material:
   - A friction material derived from aromatic polyamide fibers belonging to the nylon family and it has been given the trade name **Kevlar aramid**.
   - **High endurance performance** over its normal working pressure and temperature range.
   - **It is lighter in weight than asbestos material** therefore a reduction in driven plate inertia and the time required for gear changing.
   - Weight for weight Kevlar **has five times the tensile strength of steel**.
   - Stable rubbing properties at high operating temperatures.
   - When it reaches a temperature of 425 °C, it begins to break down and then it steadily changes to carbon and the disintegration process being completed at about 500 °C.
3. Metallic friction materials:
   - The metallic linings are normally made from either sintered iron or copper- based sintered bronze and the semi-metallic facings from a mixture of organic and metallic materials.
   - Generally, the metallic and semi-metallic linings have a **higher coefficient of friction**, can operate at **higher working temperatures**, have **greater torque capacity** and have extended life compared to that of the organic asbestos-based linings.
   - The major disadvantages of metallic materials are their relatively high inertia, high quality flywheel and pressure plate.
   - Cast iron must be used to match their friction characteristics and these facings are more expensive than organic materials.
4. Cerametallic friction materials:
   - The cerametallic material is made from a powder consisting mainly of ceramic and copper.
   - A very low inertia (about 10% lower than the organic disc and 45% lower than a comparable sintered iron disc). Consequently, it will result in quicker gear changes.

- A relatively high and stable coefficient of friction, providing an average value in the region of 0.4.
- The capability of operating at high working temperatures of up to 440 °C for relatively long periods without showing signs of fade.
- Cerametallic materials are not as sensitive to grease and oil contamination as organic asbestos-based linings.

PULL TYPE DIAPHRAGM CLUTCH:

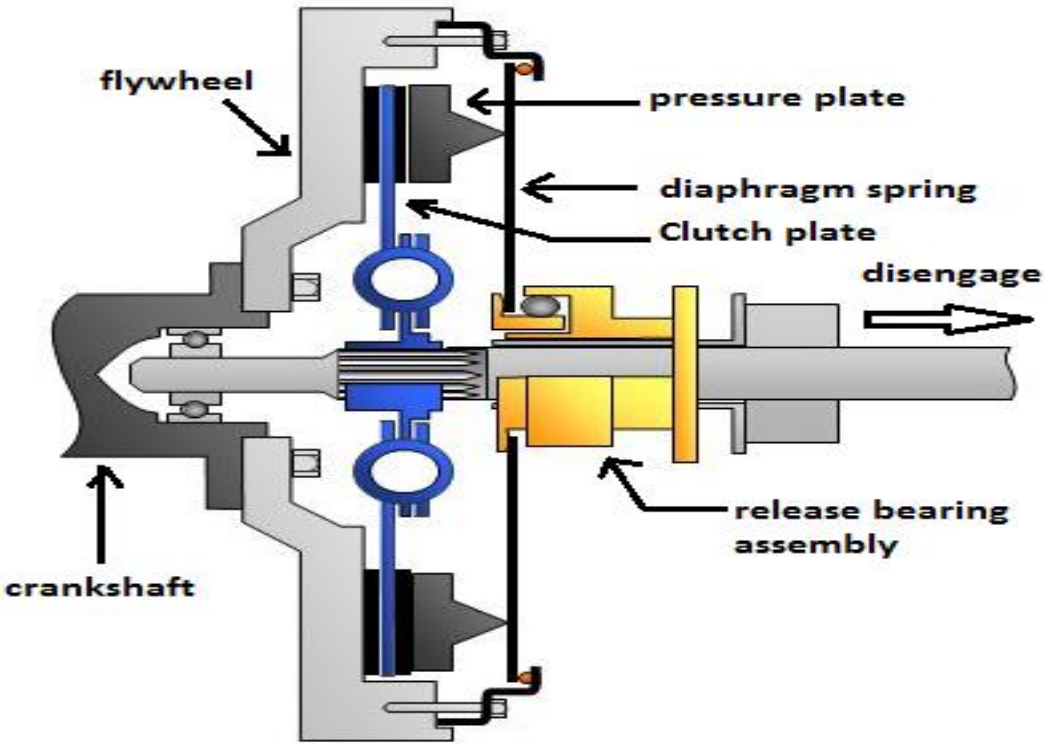

- With this type of diaphragm clutch, the major components of the pressure plate assembly are a cast iron pressure plate, a spring steel diaphragm disc and a low carbon steel cover pressing.
- The diaphragm disc is divided into fingers caused by radial slits originating from the central hole. These fingers act both as leaf springs to provide the pressure plate thrust and as release levers to disengage the driven plate from the drive members.
- When the driven and pressure plates are bolted to the flywheel, the diaphragm is distorted into a dished disc which therefore applies an axial thrust between the pressure plate and the cover pressing. This clutch design reverses the normal method of operation by pulling the diaphragm spring outwards to release the driven plate instead of pushing it.
- Advantages of this design over a similar push type clutch include lower pedal loads, higher torque capacity, improved take-up and increased durability.

MULTIPLATE DIAPHRAGM TYPE CLUTCH:

- These clutches basically consist of drive and driven plate members. The drive plates are restrained from rotating independently by interlocking lugs and slots which permit axial movement, but not relative rotational spin, whilst the driven plates are attached and

supported by internally splined hubs to corresponding splines formed on the gearbox shaft.

- The diaphragm spring is in the form of a dished annular disc. The inner portion of the disc is radially slotted. These radial slots divide the disc into a number of release levers (fingers).
- As the friction linings wear, the spring diaphragm will become more dished and subsequently will initially exert a larger axial clamping load. It is only when the linings are very worn, so that the distance between the cover pressing and pressure plate become excessive, that the axial thrust will begin to decline.

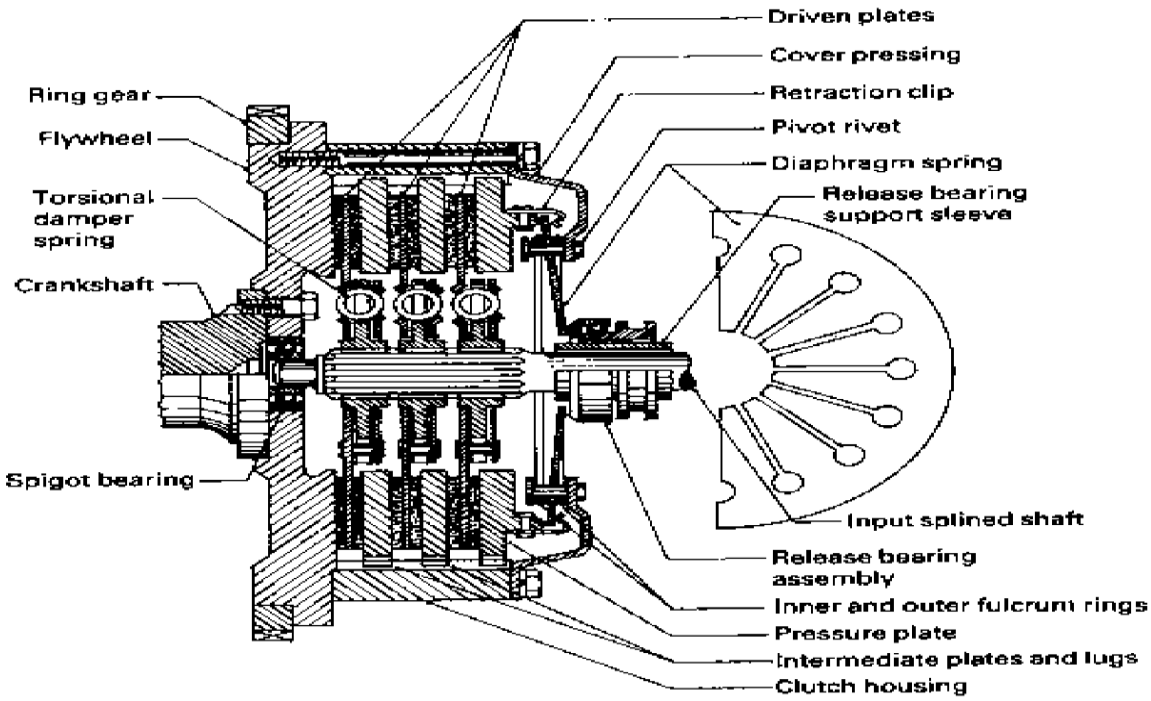

MULTIPLATE HYDRAULICALLY OPERATED AUTOMATIC TRANSMISSION CLUTCHES:

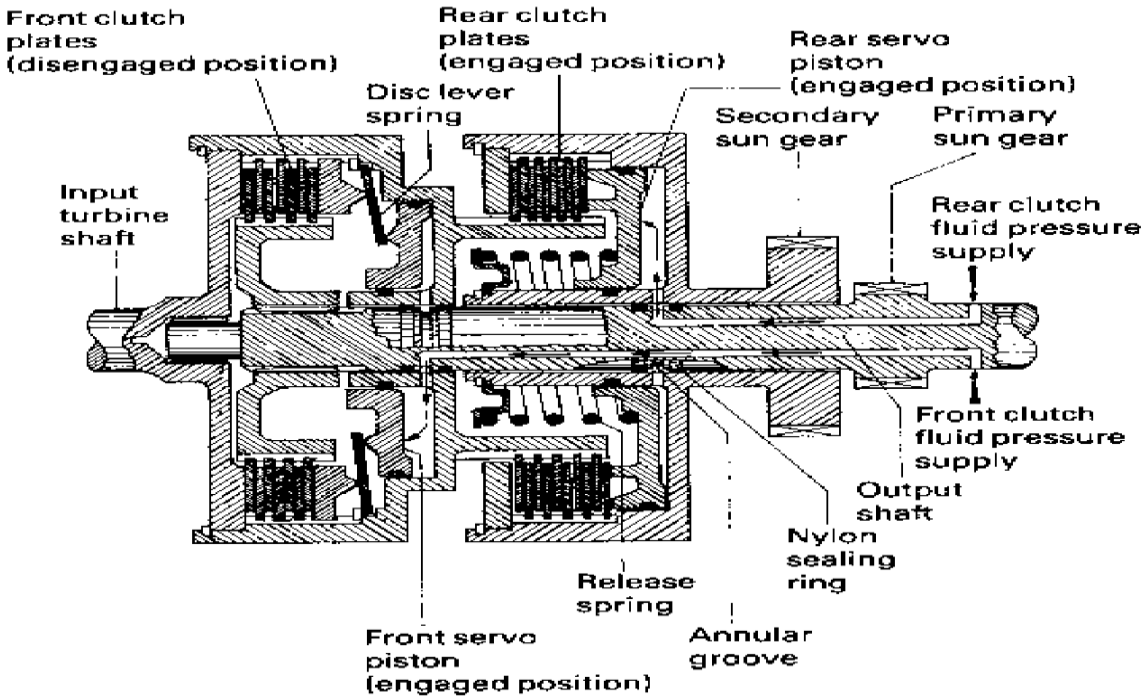

- Automatic transmissions use multi plate clutches in addition to band brakes extensively with epicyclic compound gear trains to lock different stages of the gearing or gear carriers together, thereby providing a combination of gear ratios.
- These clutches are comprised of a pack of annular discs or plates, alternative plates being internally and externally circumferentially.
- When these plates are squeezed together, torque will be transmitted from the input to the output members by way of these splines and grooves and the friction torque generated between pairs of rubbing surfaces.
- Because the whole gear cluster assembly will be submerged in fluid, these linings are designed to operate wet (in fluid).
- These clutches are hydraulically operated by servo pistons either directly or indirectly.
- In this example of multiplate clutch utilization hydraulic fluid is supplied under pressure through radial and axial passages drilled in the output shaft.
- To transmit pressurized fluid from one member to another where there is relative angular movement between components, the output shaft has machined grooves on either side of all the radial supply passages.
- When pressurized, fluid is supplied to the front clutch piston chamber. The piston will move over to the right and, through the leverage of the disc spring, will clamp the plates together with considerable thrust. The primary sun gear will now be locked to the input turbine shaft and permit torque to be transmitted from the input turbine shaft to the central output shaft and primary sun gear.
- When pressurized, fluid is released from the front clutch piston chamber, and is transferred to the rear clutch piston chamber. The servo piston will be forced directly against the end plate of the rear clutch multiplate pack. This compresses the release spring and sandwiches the drive and driven plates together so that the secondary sun gear will now be locked to the input turbine shaft. Torque can now be transmitted from the input turbine shaft to the secondary sun gear.

SEMI CENTRIFUGAL CLUTCH:

- For small torque transmission, the clutch springs have sufficient strength to transmit the torque and at the same time are not too stiff to cause any strain to the driver during disengagement.
- But for high powered engine, the clutch spring pressure required is high and disengaging the clutch is strain to the driver.
- To eliminate this problem, we use centrifugal force.
- The clutch springs are designed to transmit the torque at normal speeds, while for higher speeds, centrifugal force assists in torque transmission. Such type of clutches is called semi-centrifugal clutches.
- Three hinged and weighted levers are arranged at equal intervals. This lever is having fulcrum at one end and is hinged to pressure plate.
- At moderate speeds the pressure of the springs is sufficient to transmit the torque.
- However, at higher speeds, the weight due to centrifugal force moves thereby pressing the pressure plate.
- The centrifugal force is proportional to the square of the speed.

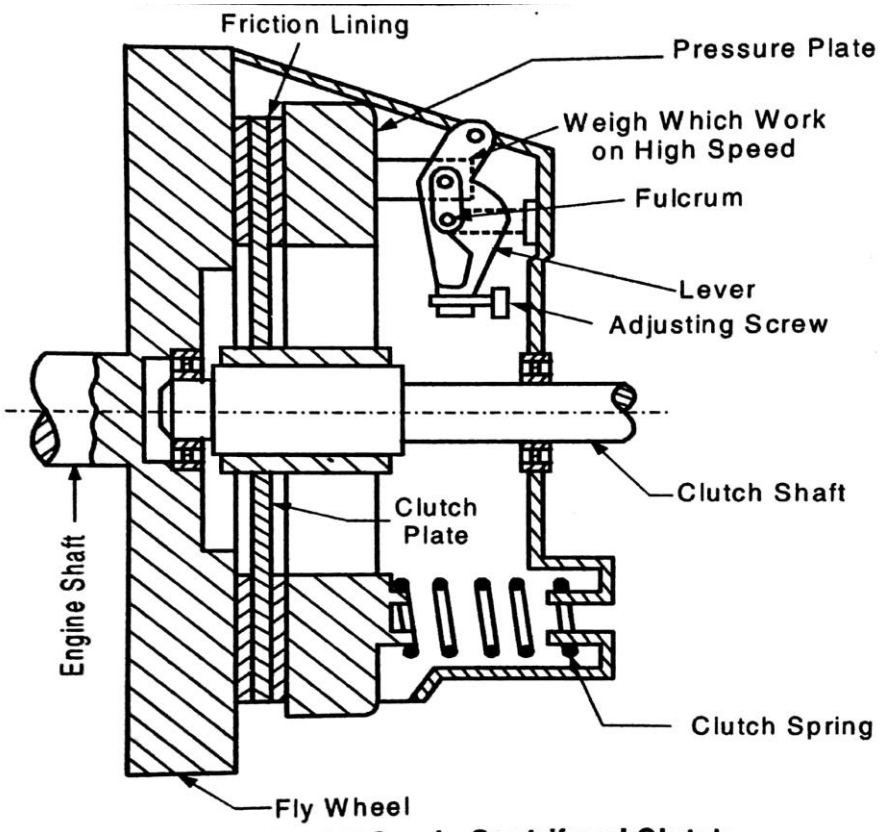

Fig. 2.9 Semi - Centrifugal Clutch

CENTRIFUGAL CLUTCH:

- A centrifugal clutch is a clutch that uses centrifugal force to connect two concentric shafts.
- The more centrifugal force due to higher engine speed, greater the contact between driven and driving member.
- A centrifugal clutch consists of an inner cylinder attached with the driving shaft and an outer housing connected with the driven shaft.

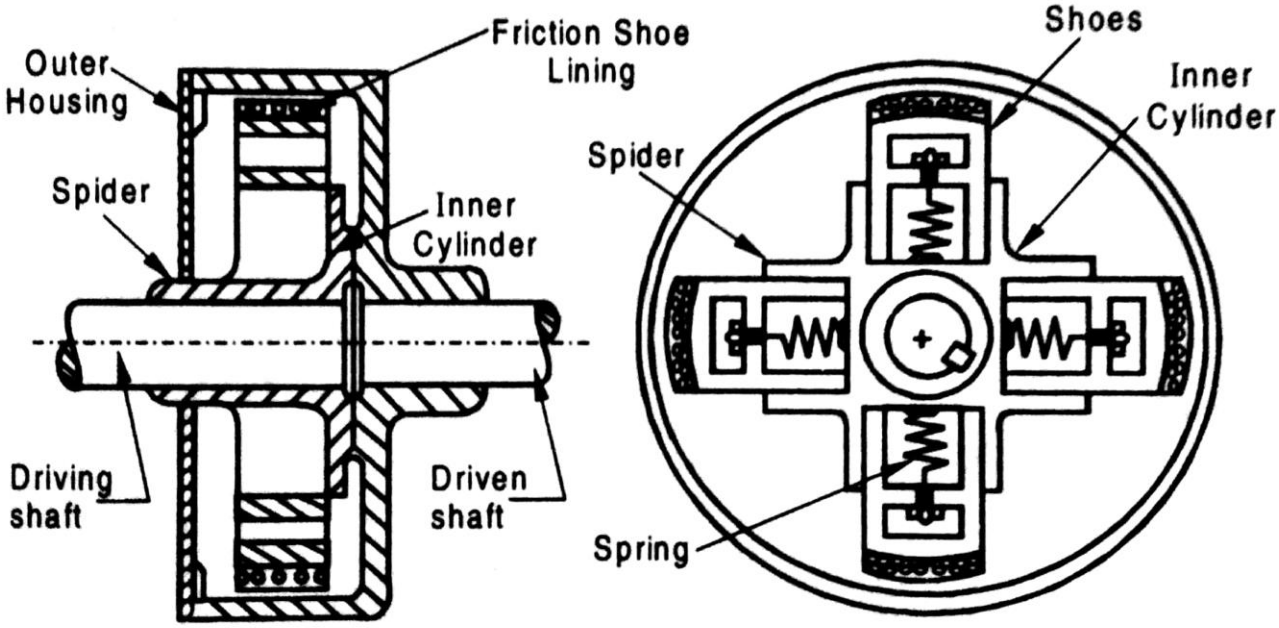

Fig. 2.5. Centrifugal clutch

- The inner cylinder is fitted with weights (spider shoes) that can slide radially when the inner cylinder rotates, and forced towards outer housing by centrifugal force, thereby it transmits torque.
- The shoes are attached to the spiders by means of springs.
- The clutch is regulated by the speed of the engine through accelerator.
- When the speed increases and reaches a pre-set value, it gets engaged and the driven member start rotating with the driving member.
- When the engine speed reduces, the clutch automatically gets disengaged.

MANUAL GEARBOX

Need of gearbox:

- Power from a petrol or diesel reciprocating engine transfers its power in the form of torque and angular speed to the propelling wheels of the vehicle to produce motion.
- The object of the gearbox is to enable the engine's torque and its rotational speed output to be adjusted by choosing a range of gear ratios within the limits of the various road conditions.

Resistance to vehicle motion:

- To keep a vehicle moving, the engine has to develop sufficient power to overcome the opposing road resistance power, and to pull away from a standstill or to accelerate.
- Road resistance is expressed as tractive resistance (kN). The propelling thrust at the tyre to road interface needed to overcome this resistance is known as tractive effect (kN).
- For matching engine power output capacity to the opposing road resistance, it is sometimes more convenient to express the opposing resistance to motion in terms of road resistance power.
- The road resistance opposing the motion of the vehicle is made up of three components as follows:

1. **Rolling resistance:**
    - Power has to be expended to overcome the restraining forces caused by the deformation of tyres and road surfaces and the interaction of frictional scrub when tractive effect is applied.
    - Factors which influence the magnitude of the rolling resistance are the laden weight of the vehicle, type of road surface, and the design, construction and materials used in the manufacture of the tyre.
2. **Air resistance:**
    - Power is needed to overcome the tractive resistance created by the vehicle moving through the air.
    - It has been found that the air resistance opposing force and air resistance power increase with the square and cube of the vehicle's speed respectively.
    - Thus, at very low vehicle speeds air resistance is insignificant, but it becomes predominant in the upper speed range.

- Influencing factors which determine the amount of air resistance are frontal area of vehicle, vehicle speed, shape and streamlining of body and the wind speed and direction.

3. **Gradient resistance:**
   - Power is required to propel a vehicle and its load not only along a level road but also up any gradient likely to be encountered.
   - Therefore, a reserve of power must be available when climbing to overcome the potential energy produced by the weight of the vehicle as it is progressively lifted. The gradient resistance is directly proportional to the laden weight of the vehicle and the magnitude of gradient.

Power to weight ratio:

- When choosing the lowest and highest gearbox gear ratios, the most important factor to consider is not just the available engine power but also the weight of the vehicle and any load it is expected to propel.
- Consequently, the power developed per unit weight of laden vehicle has to be known. This is usually expressed as the power to weight ratio.

- $$Power\ to\ weight\ ratio = \frac{Brake\ power\ developed}{laden\ weight\ of\ the\ vehicle}$$

TYPES OF MANUAL TRANSMISSION:

1. Sliding mesh gearbox
2. Constant mesh gearbox
3. Synchromesh gearbox

1. Sliding mesh gearbox:

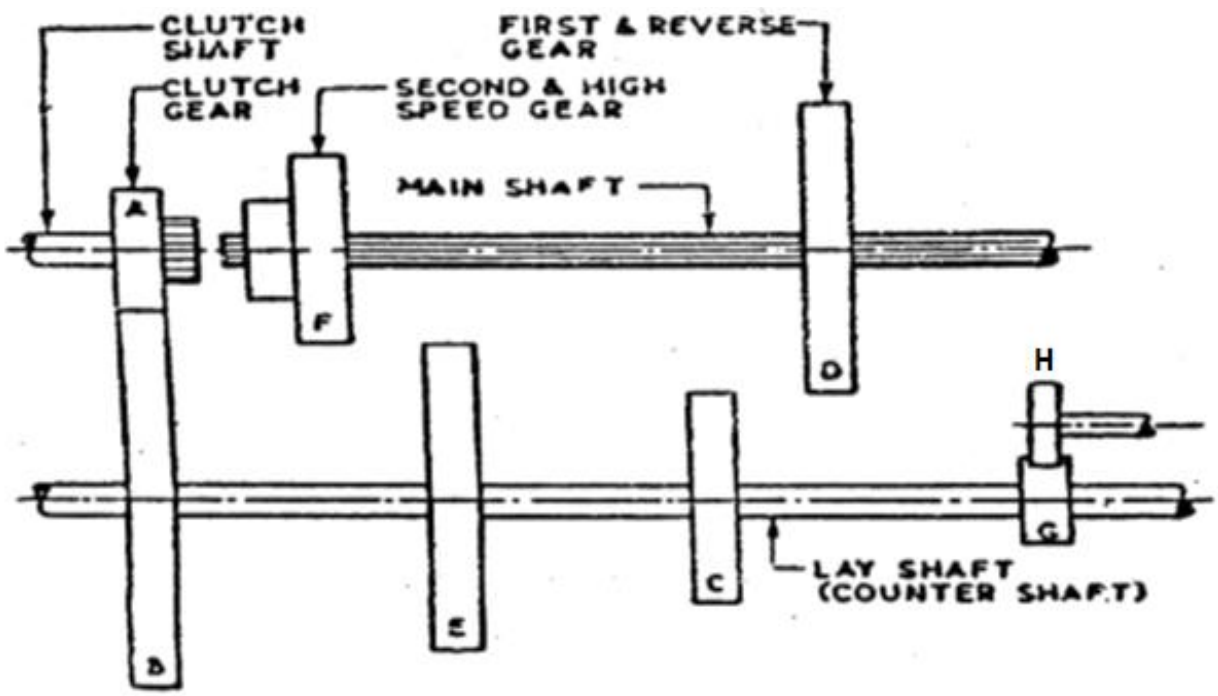

Fig. 4.6. Sliding Mesh Gear Box (Gears in neutral).

- This is the simplest type of gear box.
- The power comes from the engine to the clutch shaft and hence to the clutch gear which is always in mesh with a gear on the layshaft.
- All the gears on the lay shaft are fixed to it and as such they are all the time rotating when the engine is running and the clutch is engaged.
- Three direct and one reverse speeds are attained on suitably moving the gear on the main shaft by means of selector mechanism.
    - First gear: - gear D on the main shaft will engage with gear C on the layshaft.
    - Second gear: - gear F on the main shaft will engage with gear E on the layshaft.
    - Direct drive: - gear F on the main shaft will engage with the clutch gear A. So, the clutch shaft and main shaft will act as single unit.
    - Reverse gear: - gear D on main shaft will engage with the gear H which rotates in the opposite direction of layshaft.

2. <u>Constant mesh gear box:</u>

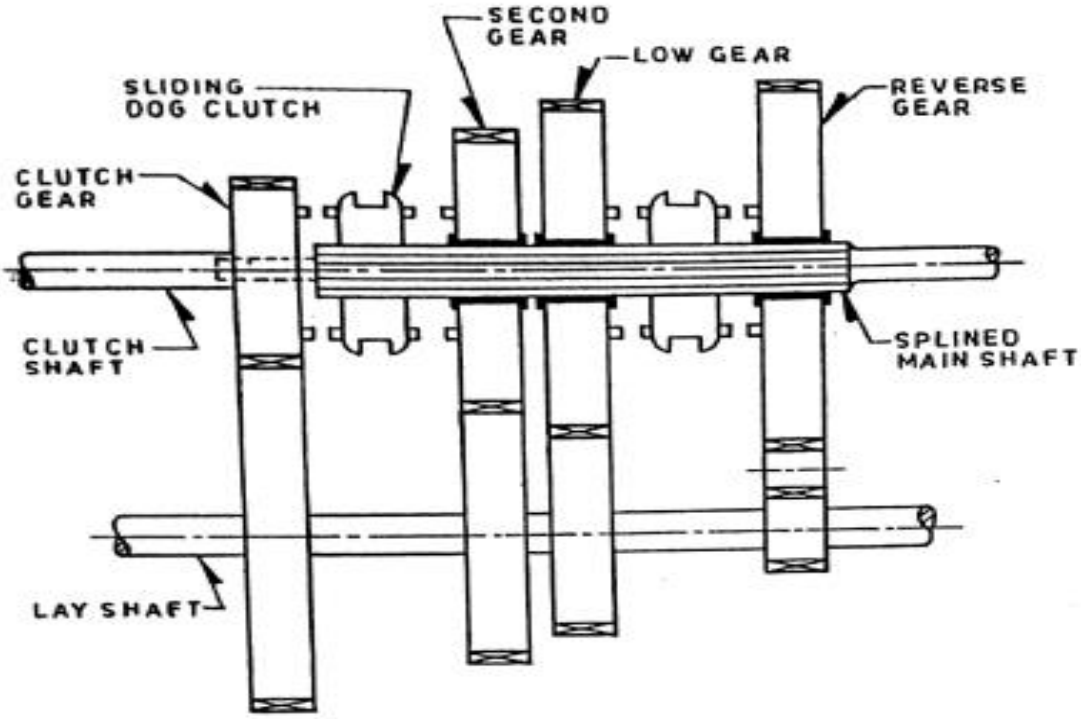

Fig. 4.9. Constant mesh gear box.

- In this type of gearbox, all the gears are in constant mesh with the corresponding gears on the layshaft.
- The gears on the main shaft which is splined, are free to rotate.
- The dog clutches are provided which are free to slide on the main shaft.
- The gears on the layshaft are however fixed.
- When the left dog clutch is slide to the left by means of the selector mechanism, its teeth are engaged with those on the clutch gear and we get direct gear.
- The same dog clutch, however when slide to right makes contact with second gear and second gear is obtained.
- Similarly, movement of right dog clutch to the left results in low gear (first gear) and towards right in reverse gear.

- In constant mesh box, for the smooth engagement of dog clutches it is necessary that the speed of main shaft gear and sliding dog must be equal.
- Therefore, to obtain lower gear, the speed of the clutch shaft, layshaft and main shaft gear must be increased. This is done by double declutching.

Advantages over sliding mesh gear box:

- As the gears have to remain always in mesh, it is no longer necessary to use straight spur gears. Instead, helical gears are used which are quieter running.
- Wear of dog teeth on account of engaging and disengaging is reduced because here all the teeth of the dog clutches are involved compared to only two or three teeth in the case of sliding gears.

3. Synchromesh gear box:

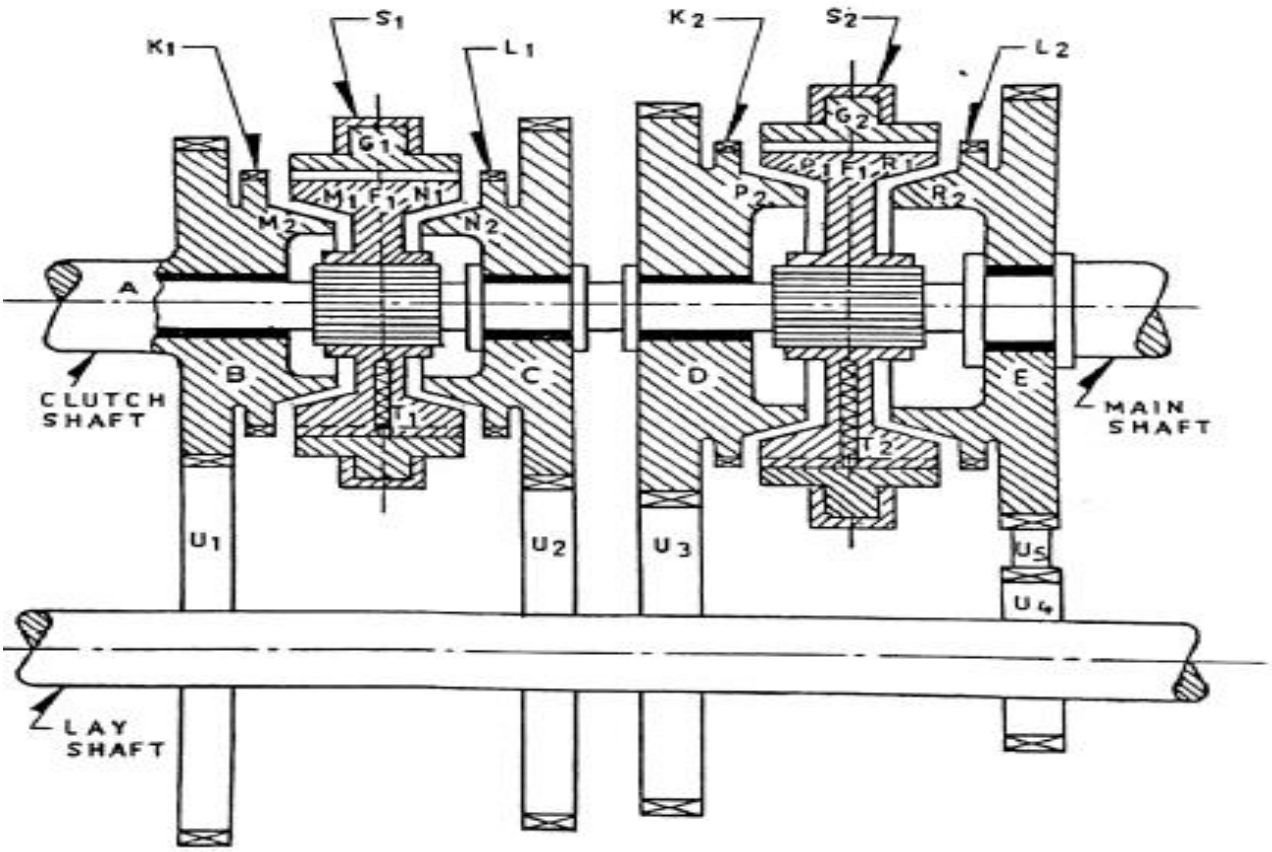

Fig. 4.10. Synchromesh Gear Box.

- This type of gear box is similar to the constant mesh type in that all the gears on the main shaft are in constant mesh with the corresponding gears on the layshaft.
- The gear on the layshaft are fixed to it while those on the main shaft are free to rotate on the same.
- Its working is also similar to the constant mesh type but in the former, there is one definite improvement over the latter. This is the provision of synchromesh device which avoids the necessity of double declutching.
- The parts which ultimately are to be engaged, are first brought into frictional contact which equalizes their speed, after which these may be engaged smoothly.
- In Fig, A is the engine shaft, Gears B, C, D, E are free on the main shaft and are always in mesh with corresponding gears on the layshaft.

- Thus, all the gears on main shaft as well as on layshaft continue to rotate so long as shaft A is rotating. Members F_1 and F_2 are free to slide on splines on the main shaft.
- G_1 and G_2 are ring shaped members having internal teeth fit onto the external teeth members F_1 and F_2 respectively.
- K_1 and K_2 are dog teeth on B and D respectively and these also fit onto the teeth of G_1 and G_2. S_1 and S_2 are forks.
- For getting the direct gear, member G_1 and hence member F_1 is slide towards left till cones M_1 and M_2 rub and friction makes their speed equal.
- Further pushing the member G_1 to the left causes it to get engaged with dogs K_1.
- Now the drive to the main shaft is direct from B via F_1 and splines.

OVERDRIVE:

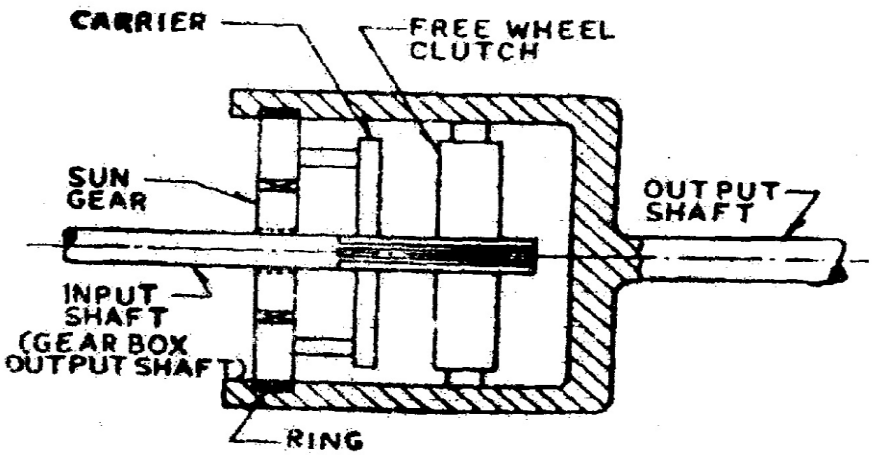

cut-away view of the overdrive.

- Overdrive is a device to step up the gear ratio in the car. It enables a high cruising speed to be attained with a comparatively low engine speed.
- The result is less wear of engine parts and decreased in vibration and noise. As the friction losses at lower speeds are less, there is a saving of fuel also.
- It is fitted between transmission and propeller shaft.
- It consists of an epicyclic gear train in which the sun gear is free to rotate on the input shaft, while the carrier can move on splines on the input shaft.
- A free wheel clutch is also fitted on the input shaft splines. The output shaft is connected to the ring.
- When the sun gear is locked i.e. it becomes stationary, the speed of the output shaft is increased (i.e. overdrive is engaged).
- When the sun gear is locked to the carrier or to ring, direct drive through the gear train is obtained. Thus, depending on the locking of the sun gear with casing or with carrier, the overdrive or the normal direct drive is obtained.

HYDRODYNAMIC FLUID COUPLING (FLUID FLYWHEEL):

- A fluid drive uses hydrokinetic energy as a means of transferring power from the engine to the transmission in such a way as to automatically match the vehicle's speed, load and acceleration requirement characteristics.
- These drives may be of a simple two element type which takes up the drive smoothly without providing increased torque.

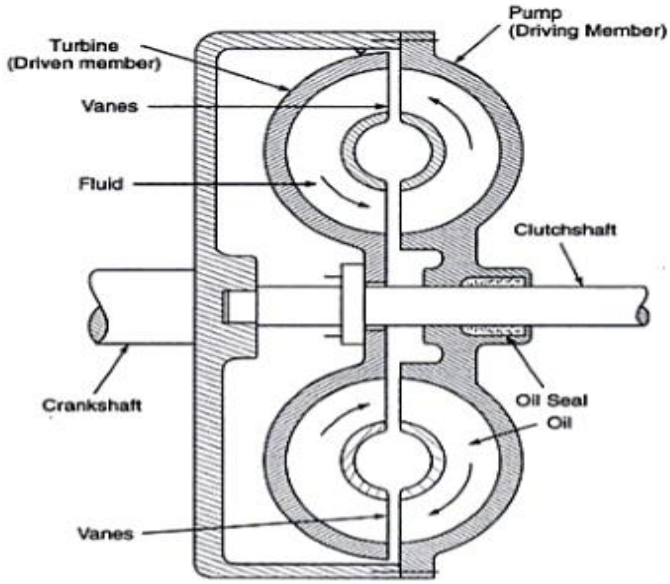

Fluid flywheel

- The hydrodynamic coupling, sometimes referred to as a fluid flywheel, consists of two saucer-shaped discs, an input impeller (pump) and an output turbine (runner) which are cast with a number of flat radial vanes (blades) for directing the flow path of the fluid.
- The driving member is attached to the engine flywheel and the driven member to the transmission shaft.
- The two rotors are always filled with fluid of suitable viscosity. These are provided with radial ribs to form a number of passages, which guide the fluid to flow in the desired direction.
- When the engine is started, the rotation of the impeller (pump) causes the working fluid trapped in its cells to rotate with it. Accordingly, the fluid is subjected to centrifugal force and is pressurized so that it flows radially outwards.
- It reacts against one side of the turbine vanes and so imparts some of its kinetic energy to the turbine wheel. The repetition of fluid particles being thrown to the turbine cells will force the turbine member to move.

<u>Characteristic of fluid flywheel:</u>

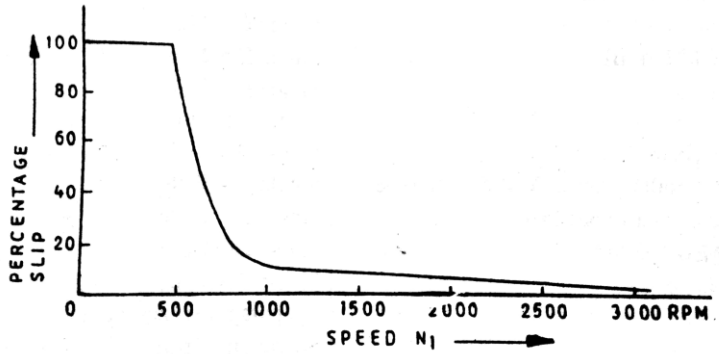

Fig. 3.53. Fluid flywheel Characteristics

- Figure shows the variation of percentage slip with speed.
- The percentage slip is defined as $\frac{N_1 - N_2}{N_1} \times 100$ where N_1 and N_2 the speeds of driving and driven members respectively.

- It is seen that for engine speeds below 500 rpm, percentage slip is 100, which means clutch is fully disengaged.
- As the engine speed increases further to about 1000 rpm, the percentage slip falls to about 20% and it further decreases to a small value as it approaches 3000 rpm.
- As percentage slip represents loss of energy and consequently increased fuel consumption, the engine should not be allowed to run at a speed between 500 to 1000 rpm.

Advantages:

- No wear on moving parts.
- No adjustment to be made.
- No maintenance necessary except oil level.
- No jerk on transmission when the gear engages.
- No skill required for operating it.

Fluid coupling efficiency and torque capacity:

- Coupling efficiency is the ratio of the power available at the turbine to the amount of power supplied to the impeller.
- The difference between input and output power, besides the power lost by fluid shock, friction and heat, is due mainly to the relative slip between the two members.
- The percentage slip will be greatly influenced by the engine speed and output turbine load conditions.
- The coupling efficiency is at best about 98% under light load high rotational speed conditions, but this will be considerably reduced as turbine output load is increased or impeller speed is lowered.
- Fluid coupling torque transmitting capacity for a given slip varies as the fifth power of the impeller internal diameter and as the square of its speed.

$$T \propto D^5 N^2$$

- Thus, it can be seen that only a very small increase in impeller diameter, or a slight increase in impeller speed, considerably raises the coupling torque carrying capacity.
- A further controlling factor which affects the torque transmitted is the quantity of fluid circulating between the impeller and turbine. Raising or lowering the fluid level in the coupling increases or decreases the torque which can be transmitted to the turbine.

TORQUE CONVERTER:

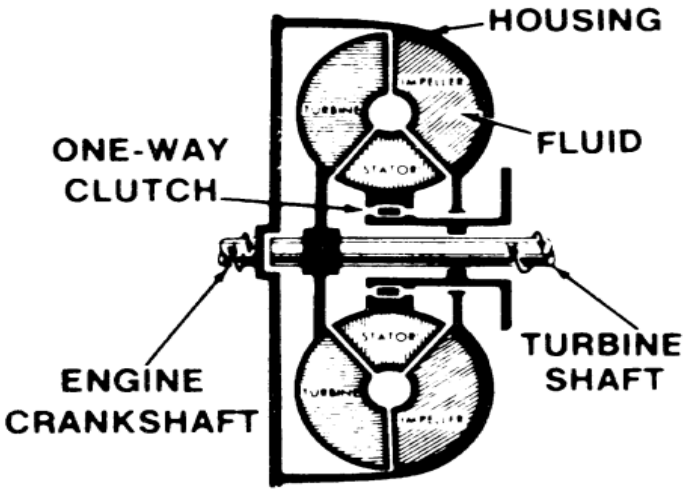

- The construction of a torque converter is similar to that of the fluid flywheel, the only difference being that it has an additional stationary member called the stator or reaction member.
- The fluid flywheel transmits the same torque where as the torque converter increases the torque in a ratio about 2:1 to 3:1.
- It consists of 3 main parts:
    - Impeller or driving member connected to engine.
    - Turbine or driven member which is connected to the epicyclic gearbox.
    - Stator fixed to the frame through a free wheel.
- When the engine is started, the impeller start rotating.
- Initially, the oil from the impeller is pushed into the turbine because of the high centrifugal force at the impeller.
- Thus, the oil having high K.E hits the outer edge of the turbine. This flow of high energy oil provides the force that tends to rotate the turbine.
- This force increases with the increase of engine speed. The turbine blade angle is such that it changes the direction of oil flow effectively backward.
- If there were no stator, and it were to enter the impeller directly, it will push the impeller in the opposite direction and will thus cause a loss of power.
- To avoid this, the fluid from the turbine is made to strike a stationary member, i.e. stator, which changes its direction suitable so that the oil leaving the stator strikes the impeller in the favorable direction, i.e. in the same direction in which the impeller is turning.
- Then the impeller throws the oil back into the turbine at the outer edge. This goes on continuously.
- Thus, repeated pushing of the turbine blade causes the torque on the turbine to increase, the phenomenon being called torque multiplication.

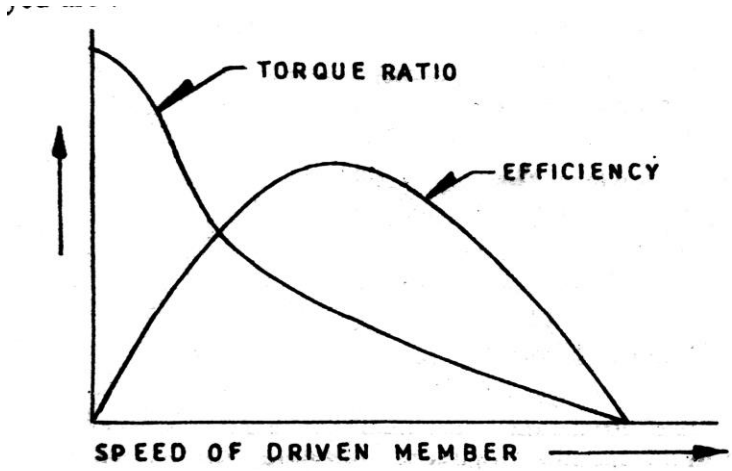

Fig. 5.10. Performance of a torque converter

- Torque multiplication occurs when the turbine speed is less than the impeller speed.
- When the vehicle begins to move the turbine speed start to increase and the torque multiplication gradually reduces as the difference in the impeller and turbine speed decreases.
- Torque multiplication become unity as the turbine speed become equal to the impeller speed.